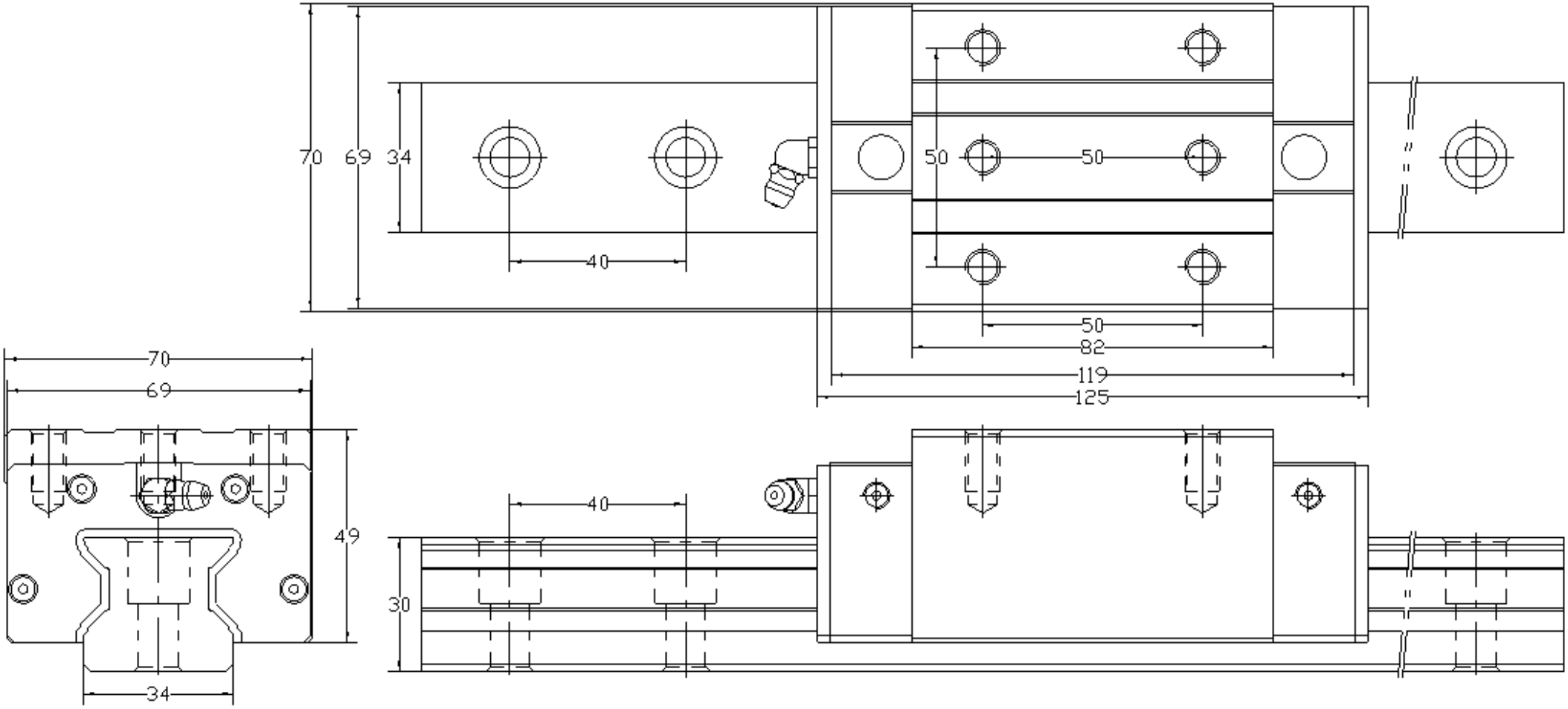

SMR35S